GOSSET RETRACTOR ADULT 17 CM

Ref. IE19900

Holtex

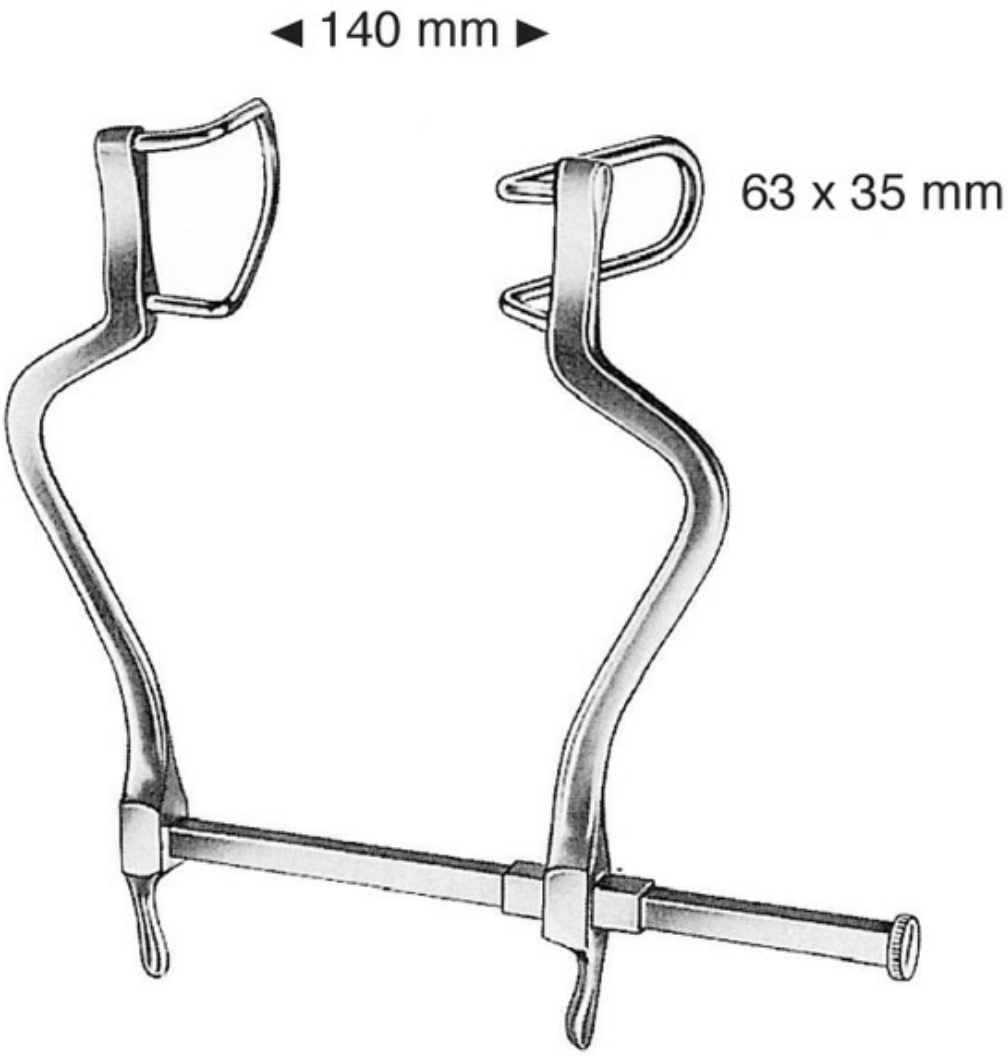

CE

DISPOSITIF MEDICAL CLASSE Ir MEDICAL DEVICE

GARANTIE 2 ANS 2 YEARS GUARANTEE

STAINLESS INOX STEEL

SPENGLER MEDICAL | 30 rue Jean de Guiramand
13290 Aix-en-Provence | France
www.spengler-med.fr
+33(0)4 42 90 31 31
info@spengler-med.fr

GOSSET RETRACTOR ADULT 17 CM

Ref. IE19900

Holtex

Features

CE Marking	CE	Medical device	Class Ir
Bar code	08961104723153	HS Code	90189084
Warranty (months)	24	Country	Pakistan
DIMENSIONS AND WEIGHT			
Packed unit / Width (cm)	nc	Bare Unit / Width (cm)	19
Packed unit / Height (cm)	nc	Bare Unit / Height (cm)	7.2
Packed unit / Length (cm)	nc	Bare Unit / Length (cm)	19.5
Packed unit / Weight	0.361	Bare Unit / Weight (kg)	0.361
SPECIFIC STORAGE CONDITIONS			
Minimum temperature	NA	Max temperature	NA
Minimum humidity	NA	Maximum humidity	NA
OTHER FEATURES			
Packed unit / Quantity	1		

SPENGLER MEDICAL | 30 rue Jean de Guiramand
13290 Aix-en-Provence | France
www.spengler-med.fr
+33(0)4 42 90 31 31
info@spengler-med.fr